HAUTESPOT® Networks

Any Camera Anywhere™

HauteWind™ Wireless Weather Station Server Appliance

The HauteWIND™ HR-WINDi Indoor Wireless Internet Weather Station Server is a complete, turnkey solution for weather monitoring.

Just attach the HR-IXPWINDi controller to your broadband router via Ethernet or 802.11b/g "WiFi", and connect your choice of Davis Instruments Vantage Pro 2 or 1-Wire weather stations sensors, and you are ready to publish the weather conditions from your location to the Internet.

The HR-WINDi pushes your weather data to either Weather Underground, HAM Weather, WeatherBug, or Citizen Weather Observer Program, or can be easily pulled into any web site for public or private access using a simple http "get" command.

HR-IXPWINDi

Applications

- Home Internet weather station with no dedicated PC
- Vacation home remote weather monitoring
- School Internet weather station
- Agriculture remote weather monitoring
- Public safety and road weather monitoring
- Television station weather cams

Functions

- Stand Alone Internet Server for Weather Monitoring. No PC required.
- Pulls weather data from Davis or 1-wire weather stations
- Pushes weather data to Weather Underground, HAM Weather, WeatherBug, or Citizen Weather Observer Program
- Simple http "get" support for pulling data into web sites
- Always on operation, not subject to the problems experienced when sharing a PC as a server
- Client Router/Bridge function between wireless and Ethernet ports
- Wireless 802.11b/g client to any wireless broadband router access point

Features

Compact. Small and lightweight black aluminum indoor enclosure.

Sustainability. 6 Watts total operating power.

Inter-operable. Designed to work with Weather Underground, CWOP, Weather Bug, HAM Weather.

Media Independence. Works with either wired Ethernet or wireless 802.11 WiFi.

Simple Configuration. Browser based management interface

Plug And Play Operation. Automatic configuration using DHCP

Remote Management. Using Dynamic DNS host name

Self Configuration. UPnP firewall

Contact Us

Call toll-free: +1 (800) 541-5589

Inquiries: sales@hautespot.net

Web: www.hautespot.net

HAUTESPOT® Networks

Any Camera Anywhere™

Specifications

Radio Module Features

- **Data Rates**
  - OFDM : 6, 9, 12, 18, 24, 36, 48, 54
  - DSSS: 1, 2, 5.5, 11 Mbps.
- **Channel Width**
  - 5/10/20 MHz
- **Network Standards**
  - WECA (Wi-Fi & Wi-Fi5)
  - IEEE 802.11
  - IEEE 802.11g
  - IEEE 802.11b
  - IEEE 802.11e
  - IEEE 802.11f
  - IEEE 802.11h
  - IEEE 802.11i
- **Compliance**
  - FCC Part 15 Class B (modular)
  - ETSI 300.328
  - ETSI 300 826
  - CE mark
- **Frequency Options**
  - IXPWINDi: 2.4 GHz
- **Physical & Enivornmental**
  - 6 Watts
  - 1.6 lbs
  - 4" (W) x4"(L) x1.5" (H)
  - 12 VDC power input voltage

HR-IXPWINDi

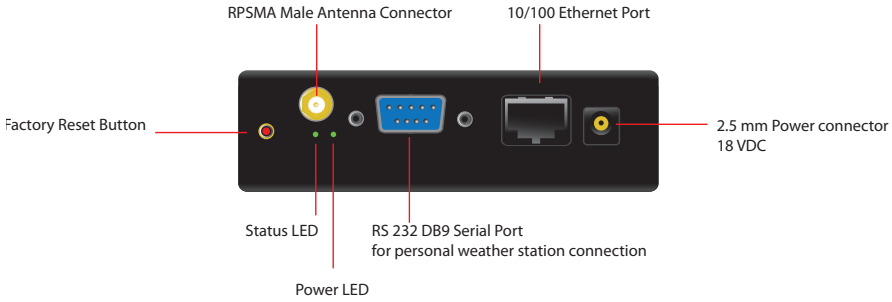

Appliance Features

- Compatible with Davis Instruments Vantage Pro 2 or 1-wire weather stations (not included)
  - Vantage Pro 2 requires WeatherLink Serial Data Logger Option
- Supports temperature, humidity, pressure, wind speed, wind direction, UV, rain, and multiple sensors
- Compatible with Weather Underground, WeatherBug, HAM Weather, and CWOP
- Sensor polling to two second intervals
- Internet server push to three second intervals (CWOP should not be updated more frequently than once every nine minutes)
- Supports simple http get method for retrieving weather information
- 802.11 b/g client bridge
- WEP, WPA and WPA2 wireless security
- Requires compatible 802.11b/g access point such as Haute-WRAP HR-WRAPSXBi-2

Hardware Features

- Stand alone high performance embedded processor
- 10/100 Base-TX Ethernet port (with auto MDI/MDIX)
- 802.11 b/g standard wireless interface
- RS-232 serial interface to weather station
- 90-240VAC to 12VDC power supply
- 6W typical operating power
- -10°C to 70°C operating temperature